Ladder for APF

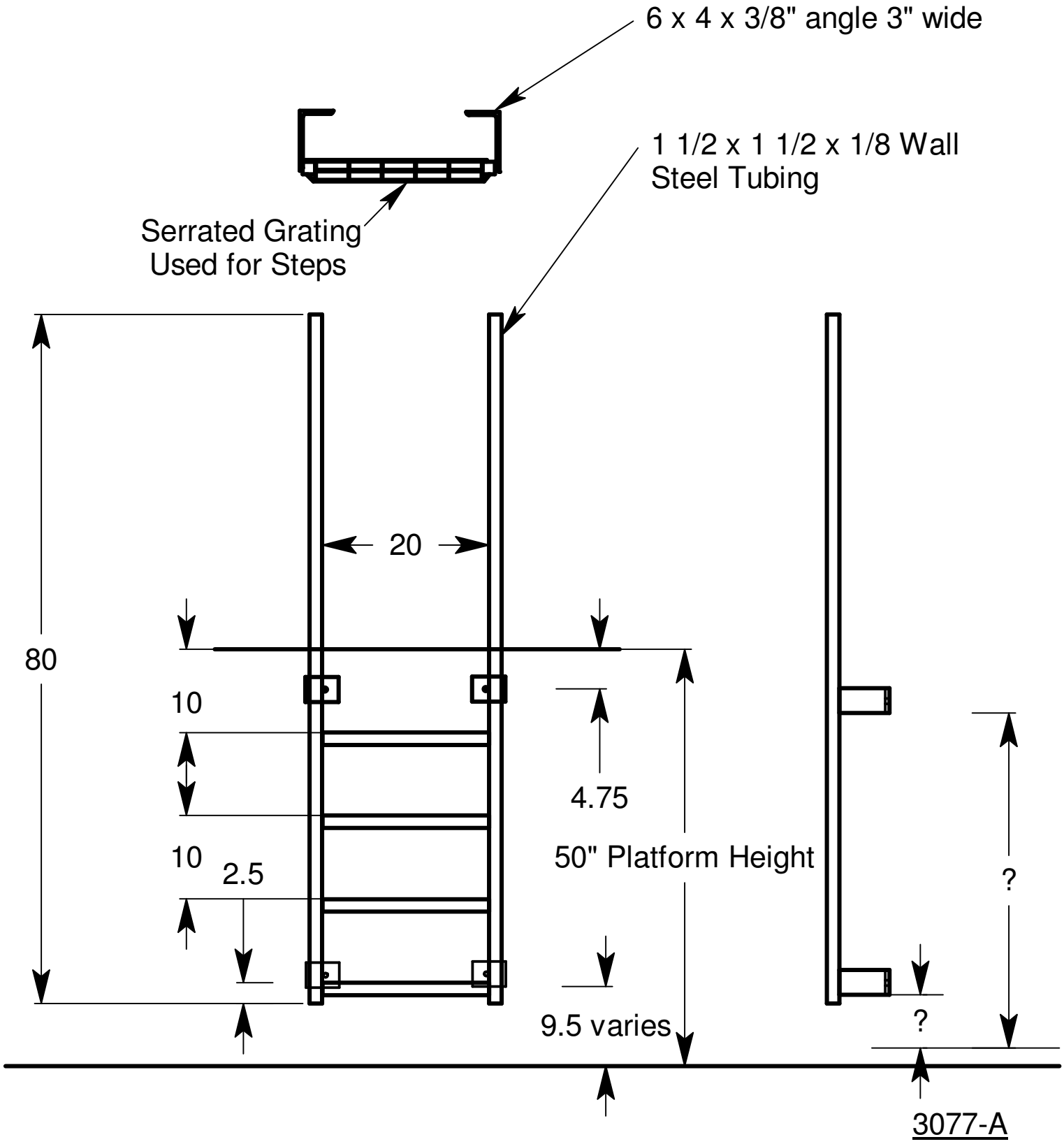

3077-A