# 12' Mini-Ramp

Modern Light Metals Inc.
Coloma, MI 49038
Ph. 269-468-5041

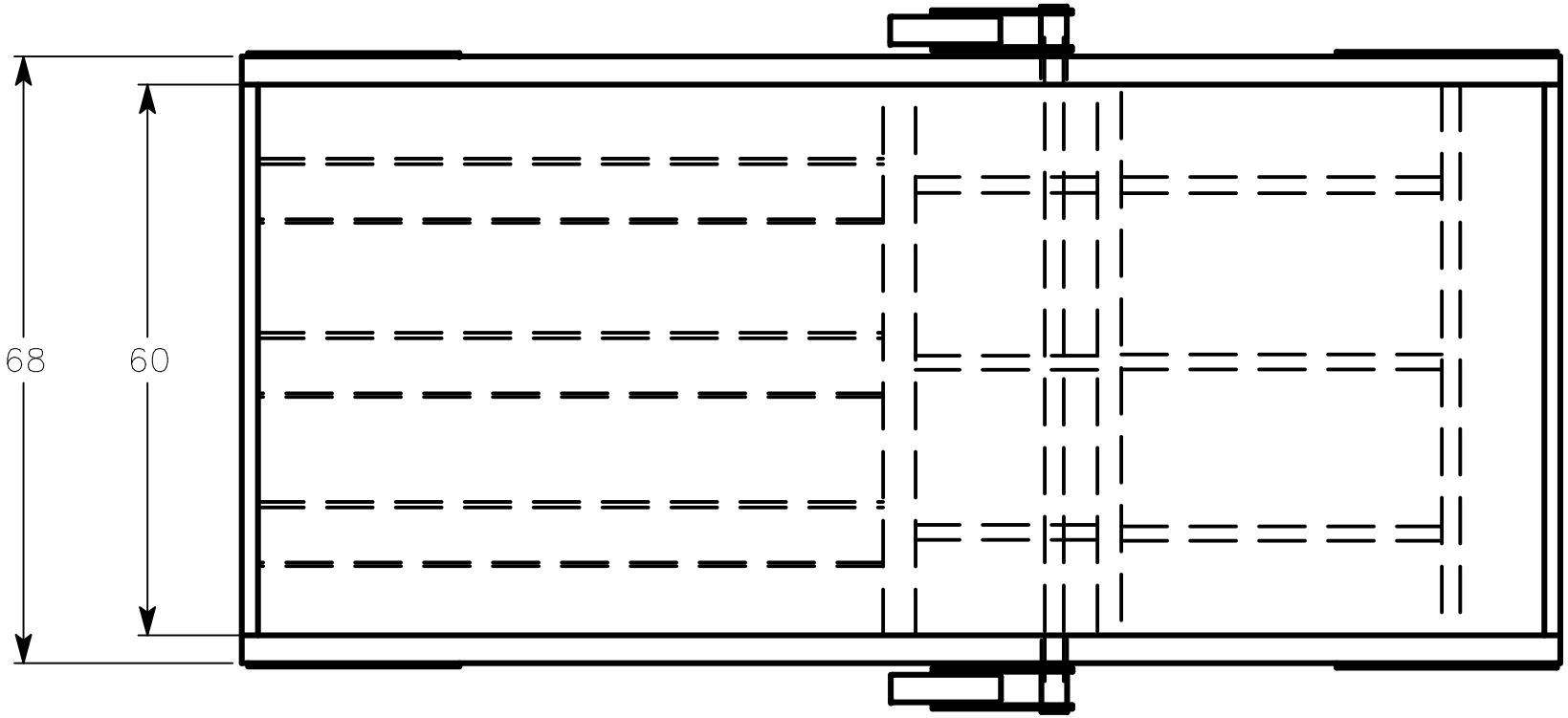


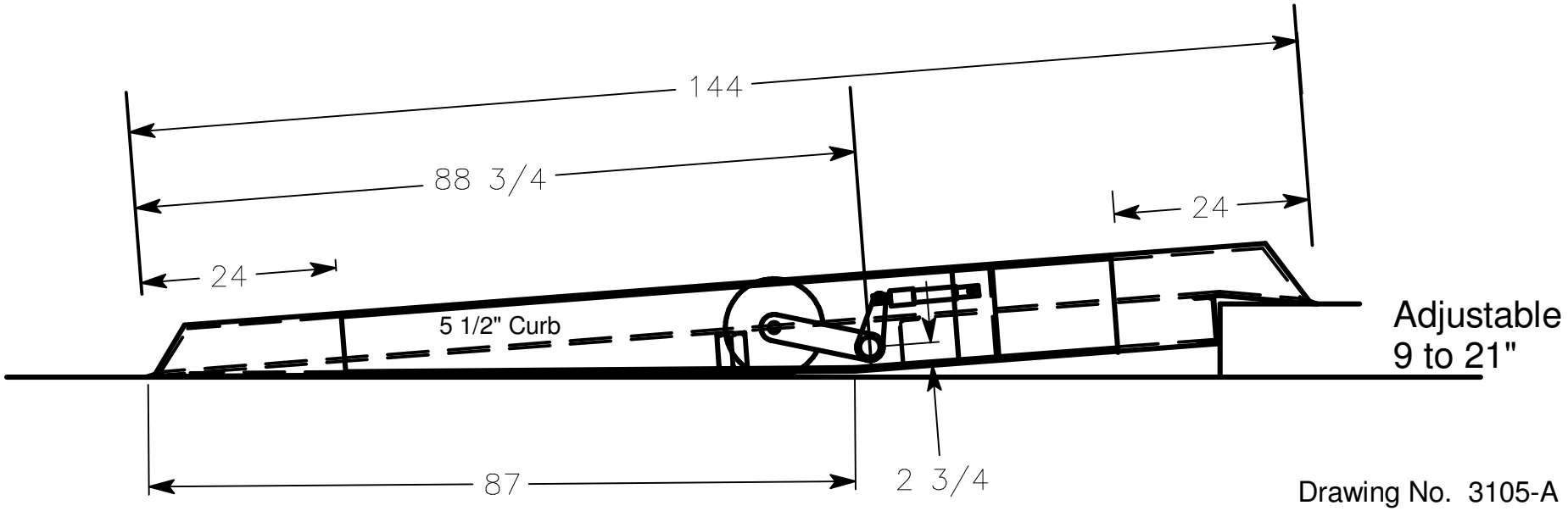


Drawing No. 3105-A
1-06-01